ES-02JH
ES-02EU
Electric Hospital Bed

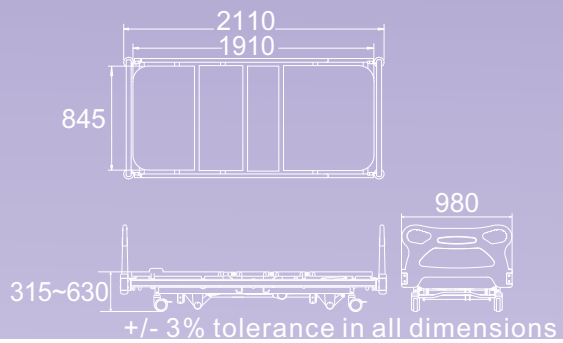

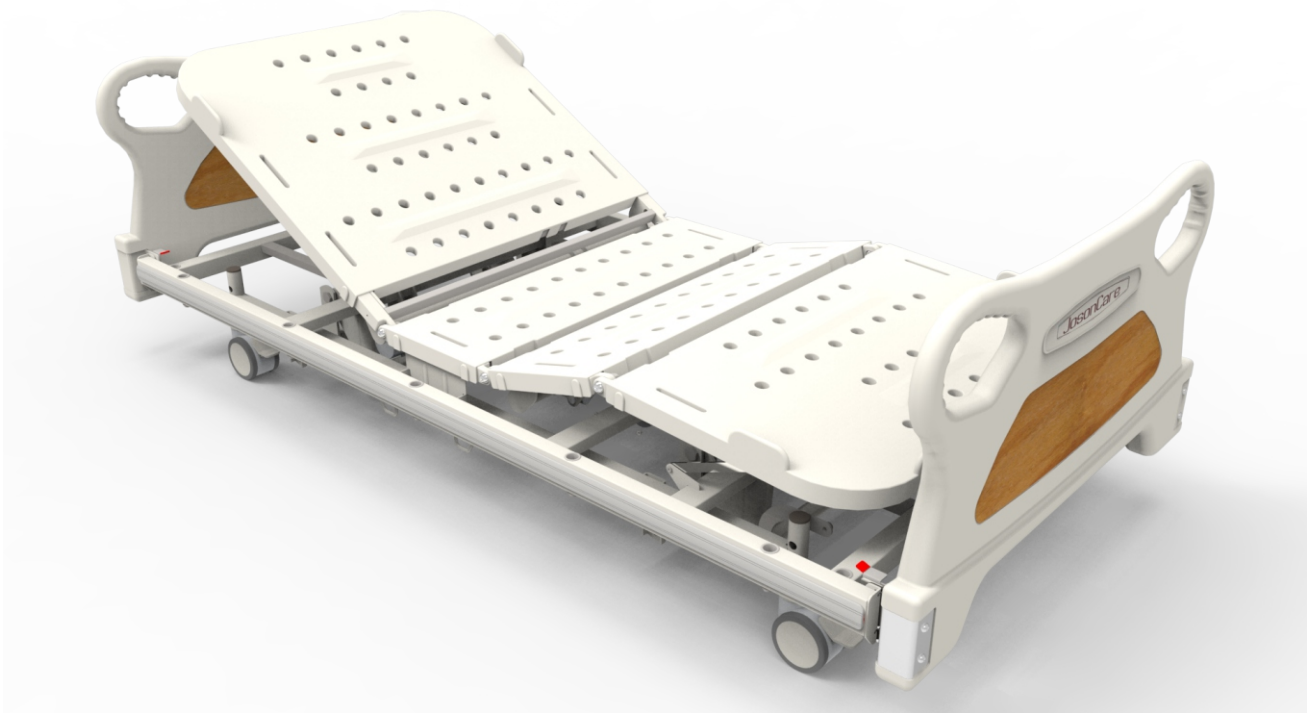

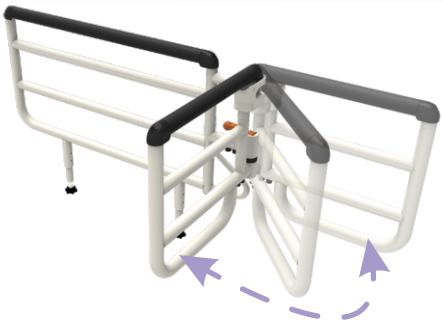

Movable Armrest Siderail, armrest with non-slip cover could spin out and grab firmly to support patient while standing up.

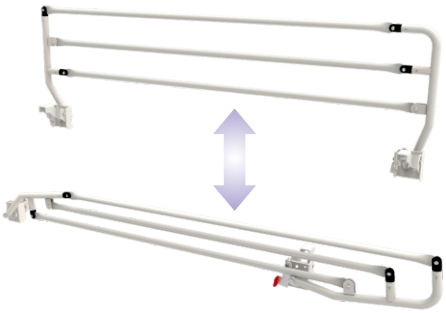

3/4 Length type of siderail for selection.

Movable Fences Siderail, easy attached & detached while using.

Another type of 3/4 length siderail with detachable design.

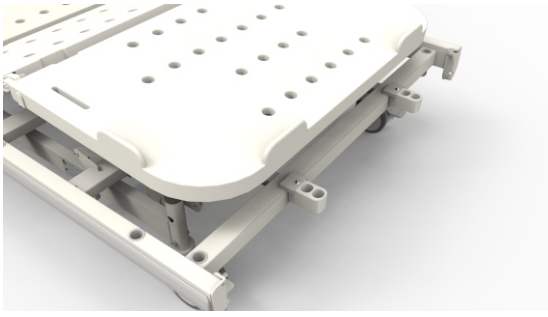

Siderail Storage Holder, allowing siderails be stored at foot end of bed to satisfy different patient condition.

4" Dust-Proof Central Braking Module, operating by pedal lever located at foot-end of the bed for one step brake.

4" Dust-Proof Lockable Dual Castor, for higher stability while mobilization.